TECHNICAL DATA

Three Phase Electric Motors - Cast Iron Frame
PE30 315 L1 2 IE3
160 kW / 220 Cv
2980 RPM

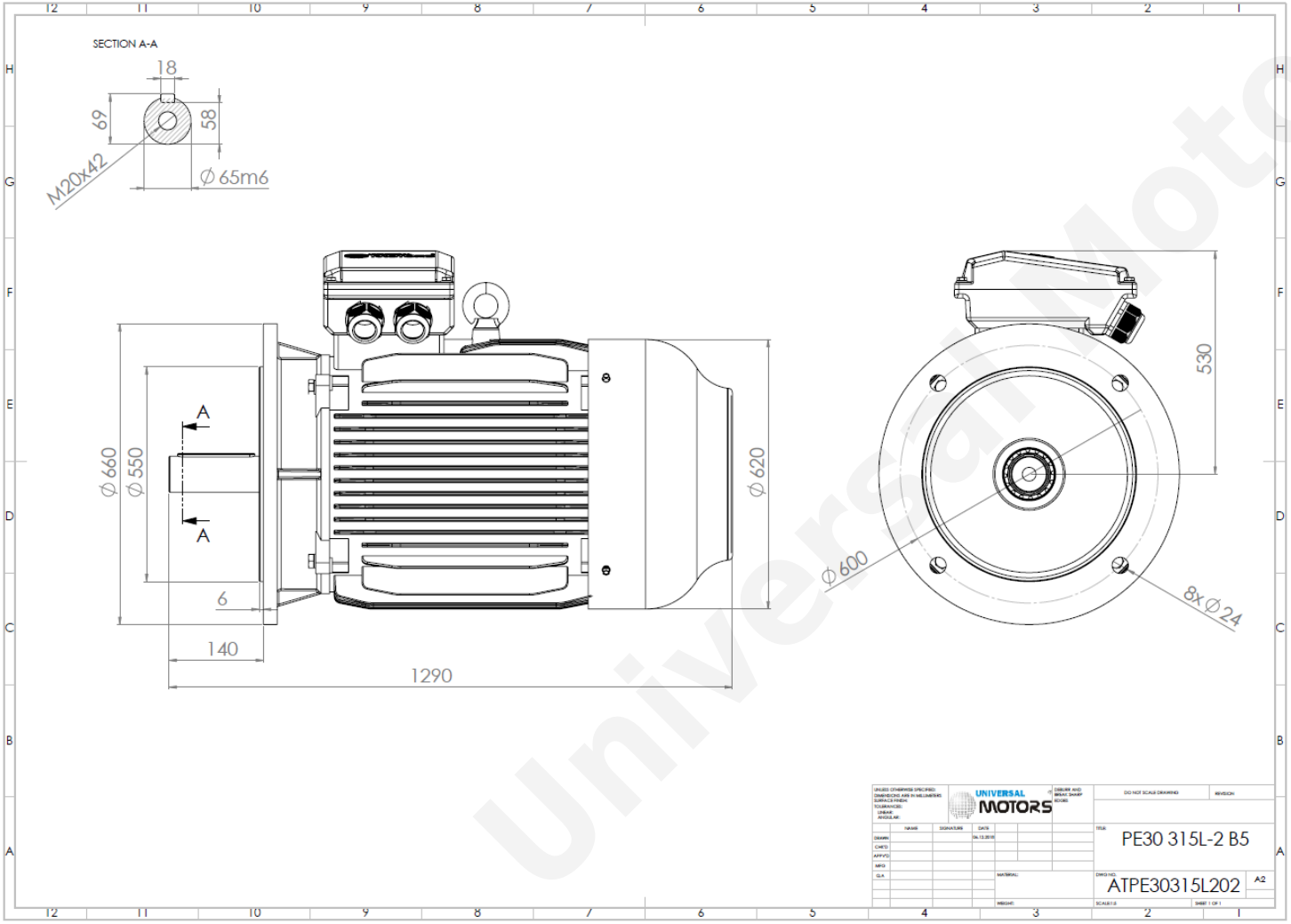

Motor type:	**PE30 315 L1 2 IE3**
Output:	**160 kW / 220 Cv**
Speed (min^{-1}):	**2980 RPM**
Frequency:	**50 Hz**
Voltage:	**400 V**
Current:	**265.0 A**
Power factor (Cos Ø):	**0.91**
Poles:	**2**
Insulation class:	**F**
Temperature rise Class:	**B**
Efficiency 50%:	**94.8 %**
Efficiency 75%:	**95.6 %**
Efficiency 100%:	**95.7 %**
Torque:	**513 N.m**
Tstarting/Tnominal:	**1.8**
Istarting/Inominal:	**7..2**
Tmaximum/Tnominal:	**2.3**
Noise:	**92 Db(A)**
Weight:	**1050 Kg**
Bearing DE:	**6317 C3**
Bearing NDE:	**6317 C3**

Regime - S1 **Altitude - 1000m** **Environment Temperature - 40ºC**

* References applied only in the UK

CONTACTS:

UNIVERSAL MOTORS
Rua de São Brás,745
4480-782 VILA DO CONDE

Tel: +351 252 299 080
Fax: +351 252 299 089
Mail: geral@universalmotors.pt

Universal Motors